NEW

Member IMC Group
Ingersoll
Cutting Tools

SFEEDUP
HIGH SPEED & FEED

RHINOTURN
ADAPTERS FOR ISO TURNING HOLDERS

NEW RHINOTURN ADAPTERS FOR ISO TURNING HOLDERS

ISO holders can now be applied with small size RhinoTurn inserts •
Strong and excellent machining performance versus ISO type inserts •
Wider application range •
High economical •

No. T350 E / 7-2020

Product Overview

Ingersoll has launched new RhinoTurn adapters that enable the mounting of small size RhinoTurn inserts to existing ISO standard turning holders.

Ingersoll's economical smaller size **RhinoTurn** insert line provides strong and excellent machining performance versus ISO type inserts. However, the **RhinoTurn** insert line requires using specific **RhinoTurn** holders.

Thus, Ingersoll has introduced **RhinoTurn** adapters that allow the use of **RhinoTurn** inserts without replacing the existing ISO turning holders. It permits end users to switch from the existing ISO type inserts to the higher performance **RhinoTurn** inserts.

With the new **RhinoTurn** adapters, customers using existing ISO holders can apply and test **RhinoTurn** inserts without changing the holders.

These holders are specifically designed for the **RhinoTurn** adapters that are compatible with lever type ISO turning holders.

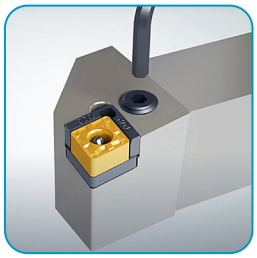

Holders, inserts and RhinoTurn adapters designation information

Holders	ISO inserts	RhinoTurn inserts	RhinoTurn adapters
PCLNR/L...12	CNMG 1204…	CNMG 0904…	6339433 AD-PCL-12/09-SET
PCLNR/L...12	CNMG 1204…	WNMX 0604…	6339434 AD-PCL-12/06W-SET
PWLNR/L...08	WNMG 0804…	WNMX 0604…	6339435 AD-PWL-08/06-SET
PS...NR/L...12	SNMG 1204…	SNMG 0904…	6339436 AD-PSS-12/09-SET

Advantages

- **ISO holders can be applied with small size RhinoTurn inserts without changing the holders.**
- **Strong and excellent machining performance versus ISO type inserts**
- **Wider application range**
- **High economical**

Inserts and RhinoTurn adapters' components information

CNMG 1204 ➔ CNMG 0904

RHINOTURN **AD-PCL-12/09-SET**

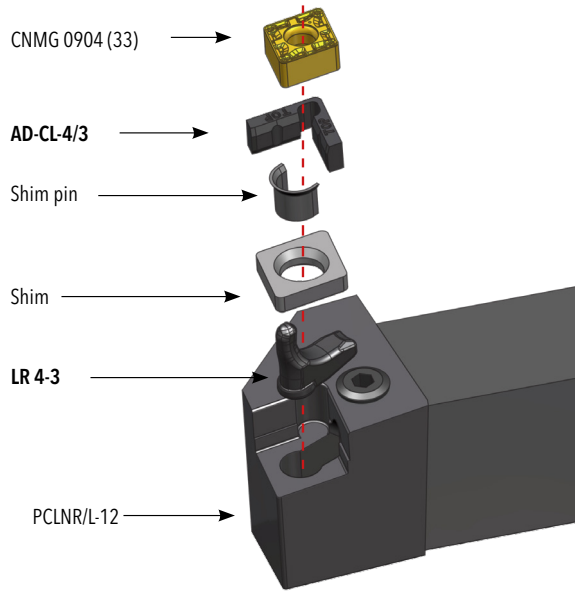

CNMG 1204 ➔ WNMX 0604

RHINOTURN **AD-PCL-12/06W-SET**

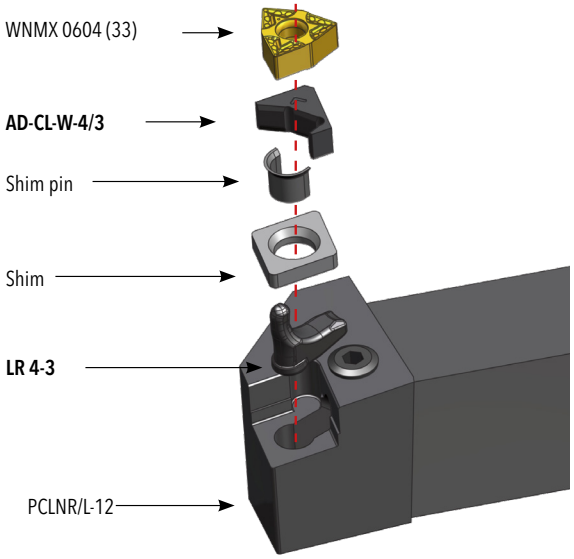

WNMG 0804 ➔ WNMX 0604

RHINOTURN **AD-PWL-08/06-SET**

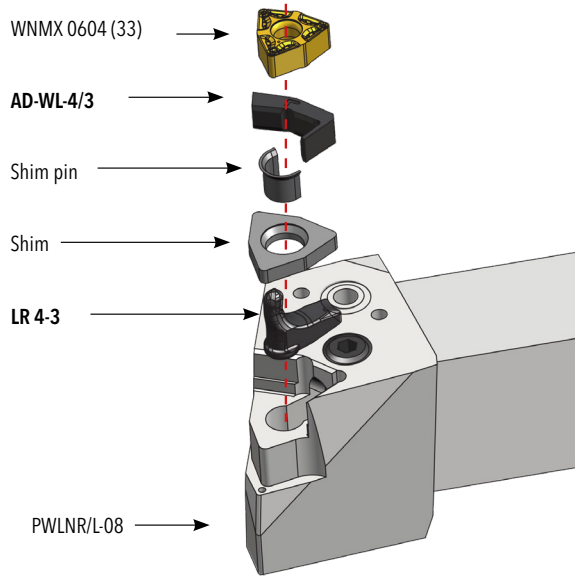

SNMG 1204 ➔ SNMG 0904

RHINOTURN **AD-PSS-12/09-SET**

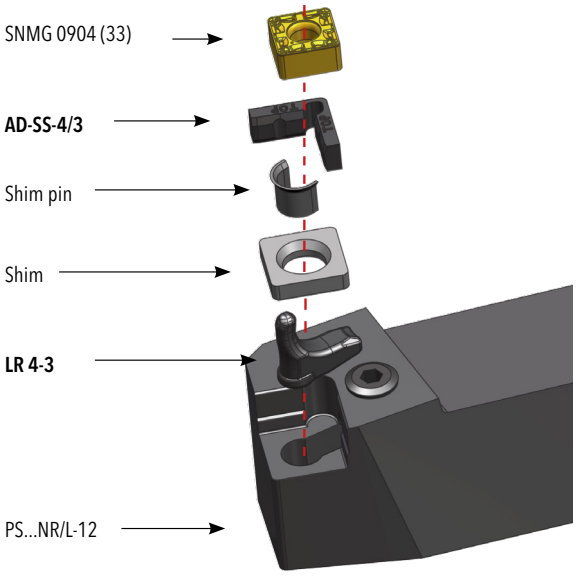

Member IMC Group
Ingersoll Cutting Tools

Order-no.: none • digital version 7.2020
Changes and printing errors reserved. [TI2020-11]

Ingersoll Cutting Tools
Marketing & Technology

Germany
Ingersoll Werkzeuge GmbH

Main Office:
Kalteiche-Ring 21–25
35708 Haiger, Germany
Telefon: +49 (0)2773-742-0
Telefax: +49 (0)2773-742-812
E-Mail: info@ingersoll-imc.de
Internet: www.ingersoll-imc.de

Office South:

Florianstraße 13–17
71665 Vaihingen-Horrheim, Germany
Telefon: +49 (0)7042-8316-0
Telefax: +49 (0)7042-8316-26
E-Mail: horrheim@ingersoll-imc.de

Office Wulften:

Steinstraße 11
37199 Wulften
Telefon: +49 (0)556-99 55 98-0
Telefax: +49 (0)556-99 55 98-25
E-Mail: wulften@ingersoll-imc.de

USA
Ingersoll Cutting Tools

845 S. Lyford Road
Rockford, Illinois 61108-2749, USA
Telefon: +1-815-387-6600
Telefax: +1-815-387-6968
E-Mail: info@ingersoll-imc.com
Internet: www.ingersoll-imc.com

France
Ingersoll France

22, rue Albert Einstein
F-77420 CHAMPS-sur-MARNE
Telefon: +33 (0) 1 64 68 45 36
Telefax: +33 (0) 1 64 68 45 24
E-Mail: info@ingersoll-imc.fr
Internet: www.ingersoll-imc.fr

RHINOTURN